DAVANTEL
Desarrollos AVANzados
en TELecomunicaciones, S.L.

C/ Pardo, 8 bajos
08027 Barcelona
Tel. +34 93 3408712
Fax. +34 93 3401399

C/ Jazmín, 30 bajos
28033 Madrid
Tel. +34 91 3023758

www.davantel.com

info@davantel.com

SISTEMAS DE TRANSMISIÓN

MÓDEMS G.SHDSL bis

Orion3

TC-PAM 128 hasta 15,2 Mbps por par. 4 Eth + 1/2 E1. CLI/Telnet/Web/SNMP

MiniFlex

TC-PAM128 hasta 15,2 Mbps por par. 2 Eth. CLI/Telnet/Web/SNMP

DSLAM 10 slots para módems G.SHDSLbis. Uplink : 2 x 1000BaseTX + 2 SFP GX

MÓDEMS VDSL2

100M

Módem VDSL2. CO/CPE. Hasta 100/75 Mbps a 300m o 10/10 Mbps a 1Km

708M - 724M

IP DSLAM. 8p-24p VDSL2. Uplink: 2 GE combo POTS splitter integrado

MÓDEMS RTC/PP

MAPPLEX

V34 28800 bps RTC y PP 2H/4H. RS232 o RS485/422. AC/DC

RADIO SOBRE IP

RoIP102

1 canal radio (audio + PTTin + PTTout) sobre IP. Compresión de voz. Compatible SIP

RoIP302

3 canales radio (audio + PTTin + PTTout) sobre IP Teléfono GSM integrado. Compatible SIP

F1103 - F2103

Módem GSM/GPRS - Servidor de terminales GPRS (TCP/UDP). Interfaz RS232 (DB9)

COMUNICACIONES MÓVILES - M2M

RUT500

Router 3G HSPA+ con 3p Eth y AP WiFi. VPN, DDNS. Backup 3G sobre WAN RJ45.

RUT950

Router 4G LTE dual SIM con 3p Eth y AP WiFi. VPN, DDNS, VRRP, HotSpot. Backup 4G sobre WAN RJ45

F3834

Router 4G LTE con 4p Eth, AP WiFi y 1p RS232. VPN y DDNS. Backup 4G sobre WAN RJ45

CSU/DSU, TDMOIP Y MPLS

CONVERSORES DE INTERFAZ

CONTRIX

V35/X21 sobre G703/G704. Disponible en tarjeta 19'' . AC/DC/WP

E1500-2S

2 puertos (V35, EIA530, X21, RS232, RS422, G703 64K y bridge/router) sobre G703/G704. CLI/SNMP

IP6610

Bridge/router (PPP/FR) sobre G703/G704 o V35/X21 nx64. 1 o 4p 10/100M. CLI/Telnet/ SNMP

TDMoIP

IP6700 (4E1)

Hasta 4 puertos G703/G704 o V35 o un puerto E3/DS3 + 1 LAN 10/100M sobre 1 WAN 10/100M

IP6716 (16E1)

Modular: 4 x4 puertos G703/G704 + 1 LAN 10/100/1000M sobre 2 WAN GE combo (1+1)

IP6763 (STM1)

Modular: 32 E1 o STM-1 + 3 x 10/100BaseTX sobre 2 GE combo

IP-MPLS / MPLS-TP

iTN8800

IP-MPLS. 12x10GE, 40xGE o 96xE1 PW3. L2VPN y L3VPN. OSPF, ISIS, BGP y MP-BGP

ITN201-R

MPLS-TP (PE). L2VPN, L3VPN, PW3. G.8031, G.8032. PTP y SyncE

RAX711-R

MPLS-TP (PE). L2VPN, L3VPN, 4x PW3. G.8031, G.8032. PTP y SyncE

CIP-4ALL

4 puertos FXS/FXO o E&M + 1 G703/G704 + 4 10/100BaseTX + 2 1000BaseX SFP

RC1201-4FE4E1T1

4 puertos G703/G704 + 4 10/100BaseTX + 1 1000BaseX SFP

RC1201-2GE16E1T1

16 puertos G703/G704 + 2 1000BaseX SFP + 4 10/100BaseTX (opc)

TRANSMISIÓN SOBRE FIBRA ÓPTICA

FIBERMUX (V35, E1, Ethernet)

O9310

4 E1 + V35 + 10/100M sobre FO (1+1)

O9330

16 E1+ 4 RS232 + 4 V35 + 10/100M sobre FO (1+1)

O9340

16 E1 + V35 + 10/100/1000BaseTX sobre FO SFP (1+1)

RC862-30(FV35) RCMS2901

E1/V35 sobre FO E1/2E1/4E1/8E1 + FE sobre FO

RCMS2903-4E1-4GE

4E1 + 4GE sobre FO

RCMS2912-8E1-GE

8E1 + GE sobre FO SFP GX (1+1)

RDSI (BRI)

FO84BR

2/4 BRI sobre FO

ETHERNET SOBRE PDH Y SDH

RC952-FEE1

10/100M sobre G703/G704

RC952-FEDS3/E3

10/100M sobre DS3/E3

RC954-FE4E1
RC954-FE8E1

10/100M sobre 4/8E1

RC951E-4FEE1

4 x 10/100M sobre 1E1. CLI/Telnet/SNMP

RC953-4FE4/8E1

4 x 10/100M sobre 4/8E1. CLI/Telnet/SNMP

RC9594FE-16E1

10/100M sobre 16E1. CLI/Telnet/SNMP

RC959-GESTM1

Agregador Gigabit Ethernet sobre STM1

WCM5100

Conversor GE (2 x RJ45 + 1 SFP) sobre STM1 (1+1)

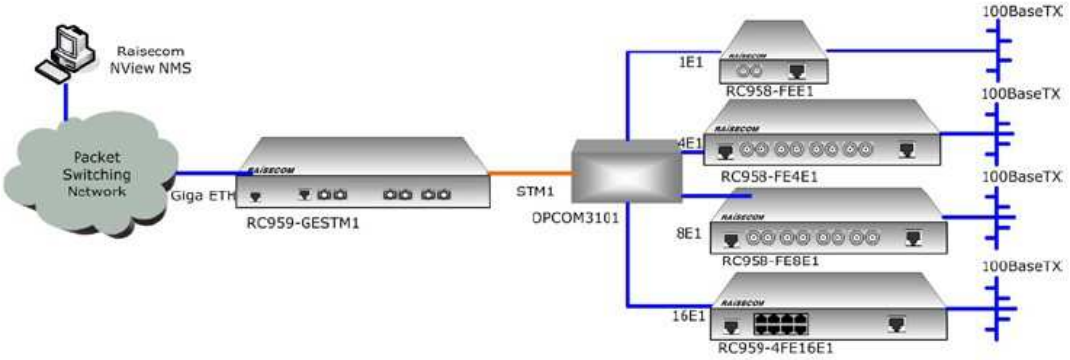

SDH, PDH, PCM

MUX PDH Y PCM

O9500 (SDH & PDH) (STM 1/4)

TM, ADM y DXC. Agreg: 4 STM-1/4 (MSP & SCNP). Trib SDH: STM1/4, 63E1, 3E3 y 8FE+1GbE. Trib PDH: 1/4E1, 12FXS/FXO, 8E&M, 2/8 Eth bridge/router, 8RS232, C37.94, 64K CD, contactos. Dual PS y CC

AM3440

Mux PDH. Agreg: E1 o 4E1 óptico/eléctrico. Trib: 1/4 E1, 2/8 Eth bridge/router, 8RS232/485/422, 12FXS/FXO, 8E&M, C37.94, 64K CD, contactos. Dual PS y CC

RC3000-15

Agreg: STM-1 y 2GbE. Trib: FXS /FXO, E&M, E1, FO (PDH/PCM), V35, RS232, RS485, 64K CD y Eth (nx64). Dual PS y CC

RC3000E

10FXS,10FXO, 8E&M 2/4H, 10/100BaseTX nx64, V35 y 8RS232 sobre 2/4 E1 o FO (incluye FE 100M). CLI/Telnet/SNMP. Dual PS

RC3000

10FXS,10FXO, 8EM 2/4H, 10/100BaseTX nx64, V35 y 8RS232 sobre 2/4E1 o FO (incl. FE 100M). CLI/Telnet

NODOS SDH

O9150S (STM 1)

TM, ADM y DCS. Agreg: 2 STM1 (MSP & SCNP). Trib: 8/16 E1 + 4/8 Ethernet.

O9400R (STM 1/4/16)

TM, ADM y DCS. Agreg: 4 STM1/4/16 (MSP & SCNP). Trib: STM-1/4, E3/T3, E1/T1, 10/100M Ethernet, GbE, FOM

O9400S (STM 1/4)

TM, ADM y DCS. Agreg: 2 STM1/4 (MSP & SNCP). Trib: 48 E1/T1, 2 E3/T3, 2 GbE o 6 FE

OPCOM3500E
iTN2100-12

Agreg: 4 STM1/4/16 (MSP & SNCP) y 2GE. Trib: STM1, E1, E3, FE, V35, V24 y G.SHDSL.bis Dual backplane: TDM y Ethernet

OPCOM3105
OPCOM3107

Agreg. 2 x STM-1 Trib: 8E1 + 4 FE Trib: 16E1 + 4FE + 1 GE

EDD, CARRIER ETHERNET Y SOLUCIONES WDM

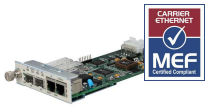

RC552-GE

EDD GE 802.3ah SFP (1+1). CLI/Telnet/SNMP

RAX711L

4 GE combo. 4E1 PW3. 802.3ah, 802.1ag, Y.1731 MPLS-TP

iTN201

Line: 2 GX SFP Client: 4 GE combo, 8E1/T1 PW3 y CLK. SyncE y PTP

NetTESTER

1 GE combo + 1 x 100/1000M SFP + 4 GE. EDD 802.3ah, Y.1731, TWAMP Lite

OPCOM100-2

Combinador pasivo 1310/1550nm o 1490/1550nm

OPCOM600

Hasta 18 canales CWDM, 2.5G y 10G. 8xGE a 10GE

SFP/SFP+/XFP

Compatibles Cisco, Ericsson, Huawei, Extreme, Juniper, Enterasys y HP

CONVERSORES DE MEDIO, DE MODO Y REGENERADORES ÓPTICOS

RC512-FE

10/100BaseTX sobre FO. Gestión remota

RC112-GE

10/100/1000BaseTX sobre FO (SFP). Gestión remota

RC202-C3

STM1 óptico a eléctrico. Gestión remota

RC802-DS3E3

E3/DS3 óptico a eléctrico. Gestión remota

OPCOM200-OTU1

Regenerador óptico 3R y conversor MM a SM. 2 x SFP.

SERVIDORES NTP/PTP Y SINCRONISMO

MINIREF

INPUT: GPS, OCXO
OUTPUT: 1 x NTP, 2 x TTL BNC

ETS-EVO2

INPUT: GPS, OCXO, IRIG-B, 2 x NTP/PTP
OUTPUT: 10MHz, 2048KHz, IRIG-B óptico y eléctrico, PPS, 2 x NTP/PTP. Dual PS

CORE-V01

INPUT: GPS, OCXO, 2 x NTP/PTP
OUTPUT: 2 x NTP/PTP/SyncE. Opcional: PPS, IRIG-B, TOD, 5/10MHz. Dual PS

NANOREF

INPUT: GPS, 2048KHz, E1 SSM, NTP/PTP
OUTPUT: 10MHz, 1 PPS, 2048KHz, E1 SSM, IRIG-B, 1 x NTP/PTP

EASYREF-E

INPUT: GPS, OCXO
OUTPUT: 1 x NTP/PTP, 2 x 10MHz

SBV01-E

INPUT: IRIG B óptico y eléctrico, 1 NTP/PTP, GPS (opcional), OCXO
OUTPUT: 4 IRIG-B SMA, 2 IRIG-B ST, 1 NTP/PTP

SWITCH EVO

Switch PTP/SyncE con GPS OCXO (opcional)
8 x GE + 2 SFP GX
1 PPS, 1 x 10MHz

MPE-V01

Modular: GPS, dual OCXO (opcional). 5 slot: 4 x 10 MHz, 4 x IRIG B AM BNC, 4 x IRIG B DC BNC, 4 x PPS BNC, 2 x 10/100/1000BaseTX + 2 x SFP NTP/PTP/SyncE, GPS adicional, 4 x E1, ToD, PPS configurable, 4 x RS232/485. Dual PS

SWITCHES CARRIER ETHERNET

ISCOM2110EA-MA (PWR)
ISCOM2128EA-MA (PWR)

Layer 2 - Access Switch

8 FE + 2 GE combo (PoE+)
24 FE + 4 GE combo (PoE+)
AC/DC/WP

ISCOM2608G
ISCOM2624G-4GE(4C)
ISCOM2648-4C

Layer 2 - Access Switch

8 GE + 2 GE combo
24 GE + 4 GE combo (4 x 10G)
48 GE + 4 x 10G
AC/DC

ISCOM2924G-4GE(4C)
ISCOM2948G-4GE(4C)
ISCOM2924GF-4GE(4C)

Layer 2 - Aggregation Switch

24 GE + 4 GE combo (4 x 10G)
48 GE + 4 GE combo (4 x 10G)
24 GX + 4 GE combo (4 x 10G)
Dual AC/DC

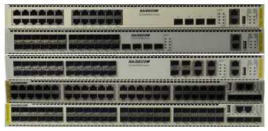

ISCOM3024G(F)-4C
ISCOM3048G(F)-4C
ISCOM3048XF-4Q

Layer 3 - RIP, OSPF, ISIS, BGP

24 GE (GX) + 4 x 10G
48 GE (GX) + 4 x 10G
48 10G + 4 x 40G
Dual AC/DC

GPON Y ROUTERS SME

ISCOM5508-GP OLT

12 x GE, 2 x 10G o 8 x GPON
Hasta 1:128 split ratio (768 ONT)
RIP v1/v2, OSFP

HT803G ONT

1 PON, 1 o 4 GE LAN (WLAN, 2FXS)
802.3ah, 802.1ag, Y.1731
Web/CLI/Telnet/SNMP

MSG1200-GEC

GE Combo o PON
1 GE + 3 FE + WLAN 802.11b/g/n
NAT/NAPT Static route/RIP/OSPF
VPN (IPSec/L2TP/GRE/EoIP)

MSG2100E

GE Combo o PON
1GE + 3 o 8 FE + WLAN 802 + 4/8/16/32FXS
NAT/NAPT Static route/RIP/OSPF
VPN (IPSec/L2TP/GRE/EoIP)

SWITCHES INDUSTRIALES

CARRIL DIN – GESTIONABLES – IEC61850

KIEN7009

8 x 10/100M
7/6/6 x 10/100M +
1/2/3 100BaseFX

SICOM3009A

8 x 10/100M
7/6/6 x 10/100M +
1/2/3 100BaseFX

SICOM3000

8 x 10/100M +
2 x 100BaseFX +
2 SFP GX

SICOM3306

8/6/6 x 10/100M
+ 1/2/3 SFP GX

SICOM3016

16 x 10/100M +
4 x 100BaseFX

SICOM3216

14 x 10/100M +
2 x 100BaseFX
+ 2 GE combo

SICOM3016B

14 x 10/100M +
4 GE combo

SICOM3010G

8 x 10/100/1000M
+ 2 SFP GX +
2 GE combo

S1003i

1 x 100BaseFX +
2 x 10/100M

S1503i

1 x SFP
100/1000M +
2 x 10/100M

S1010i

7 x 10/100M +
3 x SFP
100/1000M

S1020i

16 x 10/100M +
4 x SFP
100/1000M

S1112i-PWR

8 x 10/100M
(8PoE o 4PoE+)
+ 4 x SFP
100/1000M

S1508i

2 x GE combo +
2 x SFP GX + 4
x 10/100/1000M

S1508i-2GF-PWR

2 x SFP 100/1000M +
4 x 10/100/1000M
(PoE)

SICOM3307S

2 x GE combo +
7 x 10/100M PoE+

SWITCHES INDUSTRIALES

RACK 19'' – GESTIONABLES Y MODULARES – IEC61850

LAYER 2

SICOM2024M
24 x 10/100BaseTX
+ 2/4 100BaseFX

SICOM3024(P)
24 x 10/100BaseTX +
2/4 x 100BaseFX +
2/4 SFP GX

SICOM3028GP(T)-L2
24 x 10/100/ 1000BaseTX o
24 x 100BaseFX +
2/4 SFP GX. (IEEE1588v2)

LAYER 3

SICOM6424SM
24 x 10/100BaseTX o
24 x 100BaseFX +
2/4 SFP GX

SICOM3028GP(T)-L3
24 x 10/100/ 1000BaseTX o
24 x 100BaseFX +
2/4 SFP GX. (IEEE1588v2)

SICOM6496
48/96 x 10/100/
1000BaseTX +
8 SFP GX

S(T)2028i
2 uplink: 2 x 10/100/1000BaseTX o
2 x 1000 Base-X SFP
6 downlink: 4 x 10/100BaseTX o
4 x SFP 100 BaseFX (IEEE1588v2)

S(T)5028i
2 uplink: 2 x 10/100/1000BaseTX o
2 x 1000 Base-X SFP
6 downlink: 4 x 10/100/1000BaseTX o
4 x SFP 1000 BaseX (IEEE1588v2)

S(T)3028i
2 uplink: 2 x 10/100/1000BaseTX o
2 x 1000 Base-X SFP
6 downlink: 4 x 10/100BaseTX o
4 x SFP 100 BaseFX (IEEE1588v2)

S(T)6028i
2 uplink: 2 x 10/100/1000BaseTX o
2 x 1000 Base-X SFP
6 downlink: 4 x 10/100/1000BaseTX o
4 x SFP 1000 BaseX (IEEE1588v2)

SWITCHES INDUSTRIALES

EN50155 – EN50121

NO GESTIONABLES

Aquam5
5 x 10/100BaseTX

Aquam8
8 x 10/100BaseTX

GESTIONABLES

Aquam8012A
4G + 8 (PoE)
3G + 9 (PoE)

Aquam8512A
4G + 8 (PoE)
3G + 9 (PoE)
Layer 3

S1210i
2 x 10/100/ 1000BaseTX +
8 x 10/100BaseTX

S1218i-PWR
8 x 10/100/1000
BaseTX
(4 PoE o 2 PoE+)

SWITCHES INDUSTRIALES

CARRIL DIN - NO GESTIONABLES

Opal5 / Opal8
5TP o 4TP + 1FO
8TP o 7/6 TP + 1/2
FO

KIEN1000(B)
8 x
10/100BaseTX

KIEN1005A
5 x 10/100BaseTX
4 x 10/100BaseTX
+ 1 x 100BaseFX

KIEN1005S
5 x 10/
100BaseTX
(4 PoE)

KIEN1005G
5 x 10/100/
1000BaseTX

KIEN1008G
8 x 10/100/
1000BaseTX

KIEN1009
8 x 10/100BaseTX
7/6/6 x 10/100BaseTX
+ 1/2/3 100BaseFX

KIEN3016A
16 x 10/100BaseTX
14 x 10/100BaseTX
+ 2 x 100BaseFX

COMUNICACIONES INDUSTRIALES

KOM200
2 x RS232 + 1 x RS485
1 x RS232 + 1 x RS422
sobre FO

KOM300M
KOM600G
2 x 10/100BaseTX a
100BaseFX
1 x 10/100/1000BaseTX
a SFP GX

SICOM3005A - KPS2204
Servidores de terminales
4 x RS232/485/422 +
switch Ethernet (4TP + 2 FO)

Ruby3
Redundancy Box
PRP (IEC62439-3-4)
HSR (IEC62439-3-5)
3 x GE combo

Wireless Outdoor
AP/Bridge 2.4/5.8GHz. IEEE 802.11a,/
b/g/n (MIMO). Hasta 300Mbps. Alcances
hasta 25Km. Alimentación PoE. Antena
interna o externa.

Loop Telecom RAISECOM KYLAND Metrodata CXR Anderson Jacobson FlexDSL Telecommunications AG Digital Instruments Four-Faith TELTONIKA

www.looptelecom.com www.raisecom.com www.kyland.com www.metrodata.co.uk www.cxr.fr www.flexdsl.ch www.digital-instruments.it en.four-faith.com www.teltonika.lt